Get A Grip: Integrating Flexibility and Function in Economically Designed Open Source Robotic Hands

Elijah Phifer, Samuel Echols, Jared Talbot, Carrington Wynn, Keira Stewart
Advisor: Kuo-Pao Yang
Computer Science Department
Southeastern Louisiana University
Hammond, LA 70402 USA

***Abstract*—**

This paper introduces "Get A Grip," a robotic hand designed to be both cost-effective and functional. Employing 3D printing technology and thermoplastic materials, this device significantly reduces manufacturing costs while providing customizable applications. The applications of "Get A Grip" include its ability to mimic user hand gestures through a glove equipped with flex sensors, gesture-based music control and smartphone app connectivity.

Keywords-

Biomechatronics; 3D Printed Robotics; Assistive Technology; Hardware; Affordable Robotics; Humanoid Robotics

I. Introduction

Biomimetic robots have been an area of interest for years. They have been developed to be useful for performing tasks that are either too tedious or too dangerous for humans to do. However, biomimetic and biomedical technologies tend to be expensive and therefore inaccessible to most. Though there have been designs that have tried to simplify the human hand to keep functionality while avoiding the complexity of having to fully articulate 5 fingers, there are still tasks that are best fit for human hands such as: handling objects of varying shape and size, typing, telework/telepresence, artistic and creative endeavors, and assistive technology. A lot of these uses have to do either with the compatibility of the hand with the human using it or the compatibility of the hand with the task made for having five fingers (like playing the piano).

To address these challenges, researchers have begun exploring the use of more accessible materials and simpler construction techniques that reduce the cost without compromising the functionality of biomimetic devices. Advances in 3D printing technology, for example, have allowed for the rapid prototyping and production of custom parts at a lower cost. Additionally, the quality and availability of materials has led to the development of open source designs allowing for more collaboration and faster innovation. The ability to print a variety of materials that either harden like a polymer or dry into a rubber-like material has expanded the possibility of design. The availability of commercial printers has allowed for reliable printing without the need to deal with excessive clogs, alignment issues, or printing in mid-air. These advancements enable hobbyists, students, and professionals from around the world to contribute their ideas and improvements, which accelerates the development process and reduces costs through shared knowledge and resources.

Furthermore, the integration of biomimetic hands with wireless technology and improved sensor systems has opened up new possibilities for remote control and increased functionality. Users can now control these prosthetic devices through smartphone apps, which provide intuitive interfaces for adjusting grip patterns, force, and other settings in real-time. This level of control is particularly important for users engaged in precise tasks such as surgery or delicate handling of materials.

In this paper, we endeavor to use previous research and open source designs to create a hand that reduces complexity of design while keeping functionality. Additionally, we add multiple avenues for remote control such as through a robotic hand and a smartphone application. And we expand the uses of the hand by adding gesture-controlled music and speakers, which could be used for artistic and creative expressions. This integration of music and movement offers a new dimension of interactivity, potentially enriching the user experience and broadening the scope of applications for robotic hands. For instance, users could perform or compose music through hand gestures, providing an accessible and innovative way for individuals with disabilities to engage in musical creation. By combining robust mechanical design with sophisticated software capabilities, we aim to develop a versatile tool that not only assists in everyday tasks but also engages users in new, meaningful ways.

As the field of biomimetics continues to evolve, ongoing collaboration between engineers, healthcare professionals, and end-users will be crucial in addressing the remaining barriers to accessibility. By focusing on user-centered design and leveraging emerging technologies, developers can create more functional, affordable, and widely accessible biomimetic robotic hands that can perform a variety of tasks previously thought to be exclusive to humans. These efforts not only promise to expand the capabilities of those with limb differences, but also add new perspectives to biomimetic design and contribute to the fields of assistive technology, telepresence technology, and human-computer interaction, and 3D printed robotics

II. Related Work

There are a lot of different efforts that have been approached to solve the problem at hand. An example of this will have to be the development of a prosthetic hand that attaches below the elbow. According to the case study *Development of a low-cost prosthetic hand*, an integration of EMG signals and machine learning algorithms within a versatile and affordable biotic hand can overcome limitations of current existing prosthetic hand. This means that with the incorporation of reading brain signals, these signals are then able to tell the prosthetic arm what action is wanted from the user. This solution is more geared towards humans who do not have (for whatever reason) a hand.

Although this is considered a solution, a prosthetic hand is not a reliable solution in all situations presented in our case. For example, when encountering a dangerous task needed to get done by a human, the prosthetic hand is still essentially a hand; meaning, a human will still need to risk their safety to accomplish the task at hand. Nevertheless, our solution takes into account situations where a user can not or should not be present while still allowing the user full control of the hand by either a corresponding glove or app. Another example of how our solution is better is that this prosthetic hand relies on brain signals - meaning that whatever signaling (whether right or wrong) will be executed. With our solution, it will allow the user(s) to think out what exact action needs to be performed and then can execute that action.

Another effort that I would like to note comes from the technical report *Design of Robotic Hand and Wireless Glove to Tele-Operate*. This report informs how a robotic hand (controlled by a corresponding glove) can mimic the user's action with a certain degree of accuracy in real time - meaning that an individual glove equipped with flex sensors has full control over the robotic hand allowing teleoperation.

The setup within this report is very similar to the solution; nevertheless, our solution does not just rely on a glove but also a smartphone app. Our robotic hand has the ability to respond to our personally developed app; this app allows users to cause movement with the digital hand in the app and that action will cause the robotic hand to move. This addition that our solution has allows us to not simply rely on a glove (which can have the possibility of getting damaged and giving out) but instead have an alternative way of controlling the robotic hand. That ultimately gives users even more control.

III. Implementation

A. Software Approach and Implementation

Our software approach is pretty consistent with what any other hand similar to ours would need in order to articulate its fingers. Due to the design being mimetic of the human body, "tendons", as would be in one's forearm, pull on the finger causing it to bend at the joints. While our design is based on this idea entirely, we will explore the design itself more in depth later on.

Following this logic, the basic necessary logical components for the movement of the hand is the following: calibrating the sensors, sending the desired position of each finger, and actuating the position of each finger. This is the basic underlying logic. Any other applications which we have built to be compatible with the hand will be built on top of this logic. That being said, we are using ESP32 boards for our implementation so C++ is the language we will be using.

Because the initial function of the hand was to mirror the movement of a user with a glove on, the first step to actuate the fingers, in the code, is to calibrate the sensors (flex sensors) which will record how much the finger needs to be bent. Since the flex sensors being used are essentially variable resistors that change their resistance when bent, they are analog devices which give off continuous and variable data often even in the same position. Thus it is important to calibrate them so that each the data read can be accurately attuned the the specific condition the flex sensors are in at any given time.

This part of the implementation in C++ code is shown in Figure 1, where an array is set to loop through the amount of sensors there are, CALIBRATION_COUNT. Then the code is to calibrate each sensor using the calibrate method. This code becomes crucial when dealing with analog input because any little change in condition could cause variability and thus inconsistency.

```
void calibrateSensors()
{
        for (int i = 0; i < CALIBRATION_COUNT)
        {
          SENSORS[i].calibrate();
        }
}
```

Figure 1. Function to calibrate sensors

The second important component of the software lies in the sendPositionMessage function. This code is mostly based on the initial iteration of the design of the hand but still follows in logic. Essentially we are needing to send data to a web server which will transmit that data to the motors in the hand. Thus this code takes in information about which finger is being referenced and what angle that finger would need to be bent to. This information is then serialized into JSON format and stored in the buffer. Lastly, the positional data is sent through the websocket. This code is illustrated in Figure 2

```
void sendPositionMessage(int nFinger, float angle)
{
        char buffer[128];

        char* finger = pickFinger(nFinger);

        document["finger"] = finger;
        document["angle"] = angle;

        serializeJson(document, buffer);

        client.send(buffer);
}
```

.

Figure 2. Function to send position to server

The last component of the code is necessary to actuate movement of each finger. The setPositions function sets the position of every motor within the hand. This function essentially resets the position of the motors if they have not been, then loops through every pin on the ESP32 that is connected to a motor. As demonstrated in Figure 3, It finds the motor that has a position that needs to be updated and updates its position. This then moves the servo motor which will pull the string that bends the corresponding finger.

```
void setPositions(String data)
{
  if (!RESET)
  {
    reset();
  }

  for (int i = 0; i < 5; ++i)
  {

    int pin = SERVO_PINS[i];
    String finger = getFinger(pin);

    DeserializationError error = deserializeJson(document, data);

    if (error) {
      Serial.print(F("deserializeJson() failed: "));
      Serial.println(error.f_str());
      return;
    }

    if (finger == document["finger"])
    {
      float position = document["position"];
      analogWrite(pin, position);
    }
  }
}
```

Figure 3. Function to send position to servo motor

In addition to the code for the actual movement of the hand, an ability to control the hand through an application was also implemented. This adds the extra avenue of control which allows for the versatility of this project.

Figure 4. Application allowing control through mobile phone

Figure 5. Application allowing control through mobile phone

As shown in figure 4, the user controls toggles that denote how much each finger should bend. This would allow remote use from anywhere. As seen in figure 5, the virtual representation of the hand's fingers according to how the app tells it to. This directly translates to how it is done through the robotic hand. This application has the ability to be expanded for control of two hands and even a whole arm if necessary. The mobile application is useful because it allows the natural movement of the hand while taking away the need for a physical glove. Thus bringing down the overall cost more. An application is far cheaper and way easier to maintain and reproduce than a physical glove. Also multi-touch allows for the movement of multiple fingers.

B. Hardware Approach, Equipment, and Programming

For this project, having a microcontroller capable of pulse width modulation (PWM) and wireless capabilities is crucial. For this reason the microcontroller of choice is the Espressif Systems' ESP32. The ESP32 can perform as a standalone system or as a slave device. It is also capable of both WiFi and Bluetooth.

As represented in Figure 6, the circuit for the servo motors that are connected to the first ESP32 board is composed of 5 servos connected in parallel and 5 400 microfarad capacitors wired in series to their corresponding servos. The reason for this being so that movement of the servos remains responsive and fluid by always having a set amount of current charge available to them.

As represented in Figure 7, the circuit for the flex sensors that are connected to the second ESP32 board is composed of 5 Flex-Force Sensors connected in parallel and 5, 4.7 kilo-ohm resistors connected in series to their respective flex sensors. The flex sensors work by increasing the resistivity of the circuit the further that they are bent and/or the more force that is applied to them.

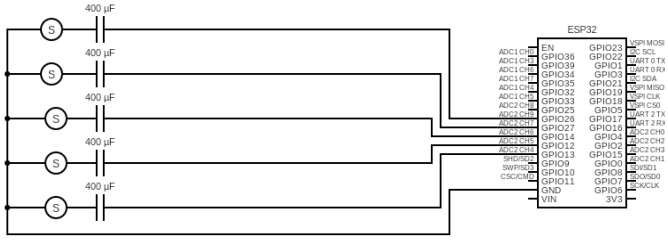

Figure 6. ESP32 Servo circuit

into the implementation. We chose, however, to allow for a more robust and user friendly application, one that has greater flexibility. When the user enters the coefficients, those memory locations are not available for work, but if the polynomial is hard coded into the implementation, those locations can be freed up for other uses.

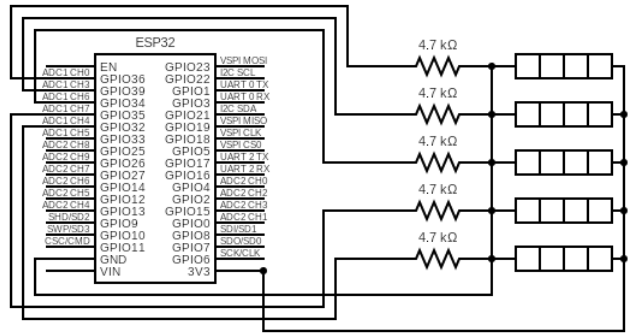

Figure 7. Flex Sensor circuit

C. Physical Design Approach

For this hardware application, many sources of inspiration were used inorder to construct the most cost effective and least complex hand while keeping as much functionality of a full hand as possible.

The first main goal of the design was to make it completely 3D printed aside from the "tendons" (made out of fishing wire) and the motors, ofcourse. This was achieved by using two types of printing material. One such material is commonly called PLA (Polylactic Acid). This common filament is cheap (roughly $15 per spool on amazon) and highly durable. As seen in Figure 8, the palm of the hand is made out of PLA for two reasons: (1) to give it integrity and (2) to simplify the design. We figured that for this beginning iteration, the palm should not need to fold and thus our focus is best spent in the careful design of the fingers. The design of the palm and the wrist was based solely on an open source design for a bionic hand [11]. The wrist was modified slightly to fit our specific motors in.

Figure 8. Final design of 'Get A Grip'

Figure 9. Inside wrist of 'Get A Grip'

The fingers are made of a rubber-like material called TPU (Thermoplastic Polyurethane). The design was inspired by a finger design for a childs prosthetic hand [1]. The design was originally intended to be soft for the use by children and also accommodate functionality in the small space given by a child's hand. We found potential in the design to be scaled up to the size of an adult hand. This design was chosen for two main reasons: (1) it is sleek and still resembles a finger, and (2) it completely eliminates components that would need to rub against one another (such as hinges). This simplification reduces the complexity of the design, making it feasible for implementation by printers of any quality. Additionally, this opens up possibilities for open-source collaboration. This design takes advantage of gaps within the rubber that act as the joints or the axis of rotation within one's fingers as seen in Figure 8. Fishing wire is then strung through the PLA palm, as seen in figure 9, up through the fingers, and attached to the fingertips using glue. When tension is applied to the wire.the fingers then bend at the gaps in the rubber causing the hand to close. Overall, the cost simply for designing the hand itself came out to be under $30. This includes multiple iterations and reprints thus making 3D printing economically superior when trying to either reproduce cheaply or rapid prototype.

IV. Evaluation

Since the main goal of this project was to get an economically built hand to move with different methods and provide extra functionalities, testing consisted of checking if the hand moved as expected or executed programmed procedures as expected. The hands move as expected and respond to the input of both the flex sensors and the application built.

V. Conclusion and Future Work

In this paper, we explored the design of a robotic hand that is both functional and economic. The design also leaves open the possibility for open source collaboration due to the reduced complexity of the design. It also incorporates multiple convenient avenues of control. A glove equipped with flex sensors can control the hands movements through the bending of the sensors. Additionally, a mobile application that allows the hand to be controlled remotely has been implemented. This opens up the possibility of making the hand usable and convenient for telework and telepresence applications. Lastly, the hand has the added ability to play music based of of user gestures and can be extended to be used as a creative and interesting instrument.

While the project works mostly as expected the hand's range of motion is somewhat limited due the servo motors inability to move within a range more than 180 degrees. Thus, further work may consist of exploring the possibility of adding more fine motor skills to the hand, sensory capabilities, and a fuller range of motion. Also the possibility of using this hand for telework and telepresence applications looks to be promising because of the soft aspect of the design making it more suitable to exist in a work environment around humans

References

[1] A. Mohammadi, J. Lavranos, Y. Tan, P. Choong and D. Oetomo, "A Paediatric 3D-Printed Soft Robotic Hand Prosthesis for Children with Upper Limb Loss," 2020 42nd Annual International Conference of the IEEE Engineering in Medicine & Biology Society (EMBC), Montreal, QC, Canada, 2020, pp. 3310-3313.

[2] Jittaboon Trichada, Traithep Wimonrut, Narongsak Tirasuntarakul, Thanacha Choopojcharoen, and Bawornsak Sakulkueakulsuk. 2021. Design of an Open Source Anthropomorphic Robotic Finger for Telepresence Robot. In Proceedings of the 2021 4th International Conference on Robot Systems and Applications (ICRSA '21). Association for Computing Machinery, New York, NY, USA, 62–66.

[3] Ivan Chavdarov, Ivaylo Georgiev, Lyubomira Miteva, Roumen Trifonov, and Galya Pavlova. 2021. Analysis of the kinematic characteristics of a 3D printed finger of robotic humanoid hand. In Proceedings of the 22nd International Conference on Computer Systems and Technologies (CompSysTech '21). Association for Computing Machinery, New York, NY, USA, 145–150.

[4] P. Khanna, K. Singh, K. M. Bhurchandi and S. Chiddarwar, "Design analysis and development of low cost underactuated Robotic hand," 2016 IEEE International Conference on Robotics and Biomimetics (ROBIO), Qingdao, China, 2016, pp. 2002-2007.

[5] K. Yamazaki et al., "Home-Assistant Robot for an Aging Society," in Proceedings of the IEEE, vol. 100, no. 8, pp. 2429-2441, Aug. 2012.

[6] Y. Wang and W. Zhang, "Data glove control of robot hand with force telepresence," 2015 IEEE International Conference on Robotics and Biomimetics (ROBIO), Zhuhai, China, 2015, pp. 314-319.

[7] J. L. Raheja, G. A. Rajsekhar and A. Chaudhary, "Controlling a remotely located robot using hand gestures in real time: A DSP implementation," 2016 5th International Conference on Wireless Networks and Embedded Systems (WECON), Rajpura, India, 2016, pp. 1-5

[8] H. M. Do, C. J. Mouser, Y. Gu, W. Sheng, S. Honarvar and T. Chen, "An open platform telepresence robot with natural human interface," 2013 IEEE International Conference on Cyber Technology in Automation, Control and Intelligent Systems, Nanjing, China, 2013, pp. 81-86.

[9] Raafat Ahmed Abdel El-Azim Mahmoud, Atsushi Ueno, and Shoji Tatsumi. 2011. An assistive tele-operated anthropomorphic robot hand: osaka city university hand ii. In Proceedings of the 6th international conference on Human-robot interaction (HRI '11). Association for Computing Machinery, New York, NY, USA, 85–92.

[10] Pritesh Chhajed, Hirakjyoti Basumatary, Mantoo Kaibarta, and Shyamanta Moni Hazarika. 2022. Non-Assembly 3-D Printed Anthropomorphic Hand Prosthesis for Low-Income Countries. In Proceedings of the 2021 5th International Conference on Advances in Robotics (AIR '21). Association for Computing Machinery, New York, NY, USA, Article 46, 1–6.

[11] https://www.thingiverse.com/thing:4807141

[12] Bhandari, Shubham, Rohit Bindal, Payal Sharma, Mohammad Zubair, and Divanshu Jain. 2021. "Design of Robotic Hand and Wireless Glove to Tele-Operate," June. https://doi.org/10.1145/3478586.3478606.

[13] M. Syakhisk Naufal Adani, Edita Rosana Widasari, and Eko Setiawan. 2023. "Developing a Low-Cost Prosthetic Hand with Real-Time Machine Learning Capabilities," October. https://doi.org/10.1145/3626641.3626681.

Additional resources

I. The code for the hardware, websokect, and application: https://github.com/sechols223/CMPS-375-Get-a-Grip (hardware code, websocket server, websocket proxy, mobile/desktop controller app)

II. The code for the website: https://github.com/codeJester27/CMPS-375-Get-a-Grip-Website (controller website)

III. The code for the virtual hand: https://github.com/codeJester27/Get-a-Grip-Virtual-Hand (virtual hand)

IV. BIOGRAPHY

Elijah Phifer has attended Southeastern since the fall of 2021 and plans to graduate with a degree in Computer Science in May 2025, and then to pursue his PhD in computational statistics or cyber security. For two semesters Elijah has held a research assistantship with Dr. April Wright studying Computational Biology.

Jared Talbot has attended Southeastern since the fall of 2022 and plans to graduate with a degree in Computer Science with a scientific concentration in May 2026. He has held the position of Associate Software Developer at Envoc since the summer of 2023 due to his skills in web development, but plans to explore new fields to express his computer science expertise in the future.

Keira Stewart has attended Southeastern since the fall of 2022 and plans to graduate with a degree in Information Technology in May 2026. She plans to get certifications and become a cybersecurity professional.

Carrington Wynn has attended Southeastern since the fall of 2022 and plans to graduate with a degree in Computer Science with a concentration in pre-masters in business administration (Pre-MBA) in May 2026, and then to pursue her masters in Business Administration (MBA). For two semesters, Carrington has held a software engineering internship with Applied Research Associates (ARA).

Samuel Echols has attended Southeastern Louisiana University since the Fall of 2021 and plans to graduate with a degree in Information Technology in May 2025. Afterwards, he plans to pursue his Ph. D in either Data Science or Computer Architecture.